VIEW OF ALLEY

EXISTING PARKING AREA

FRANK SHIRLEY

ARCHITECTS

40 Pearl Street
Cambridge MA 02139

t: 617.547.3355
f: 617.547.2385

www.frankshirleyarchitects.com

PROJECT

Alterations to:

55 COMMONWEALTH AVE.
Boston, MA 02116

THESE EXISTING PLANS AND/OR PHOTOGRAPHS ARE A REPRESENTATION OF THE EXISTING CONDITIONS OF THE BUILDING. THESE DRAWINGS/PHOTOGRAPHS ARE FOR THE GENERAL CHARACTERISTICS OF THE EXISTING CONDITIONS AND NOT AN EXHAUSTIVE INVESTIGATION INTO ACTUAL HIDDEN CONDITIONS. THIS INFORMATION IS FOR COORDINATION OF THE WORK TO BE PREFORMED BY THE GENERAL CONTRACTOR. THE ARCHITECT BEARS NO RESPONSIBILITY FOR THE ACCURACY OF THIS INFORMATION. THE GENERAL CONTRACTOR SHALL EXAMINE THESE CONDITIONS IN THE FIELD PRIOR TO CONSTRUCTION AND BECOME FAMILIAR WITH THE WORK. AFTER EXAMINATION OF THE EXISTING CONDITIONS, THE GENERAL CONTRACTOR SHALL VERIFY ALL CONDITIONS AND DIMENSIONS AND NOTIFY THE ARCHITECT OF ANY DISCREPANCIES BETWEEN THE EXISTING CONDITIONS AND THE NEW PROPOSED WORK. ALL WORK CONSTRUCTED PRIOR TO NOTIFICATION, THAT DOES NOT CONFORM TO THE DESIGN OR LAYOUT OF THE PLANS AND DIMENSIONS SHALL BE REPLACED BY THE GENERAL CONTRACTOR.

ISSUES / REVISIONS

Date	*Description*
12 APR 17	BBAC REVIEW

© FRANK SHIRLEY ARCHITECTS, 2017. All rights reserved.
This drawing cannot be reproduced without permission.

DRAWING TITLE

Existing Conditions

SCALE

DATE

April 12, 2017

SHEET NUMBER

BBAC-1

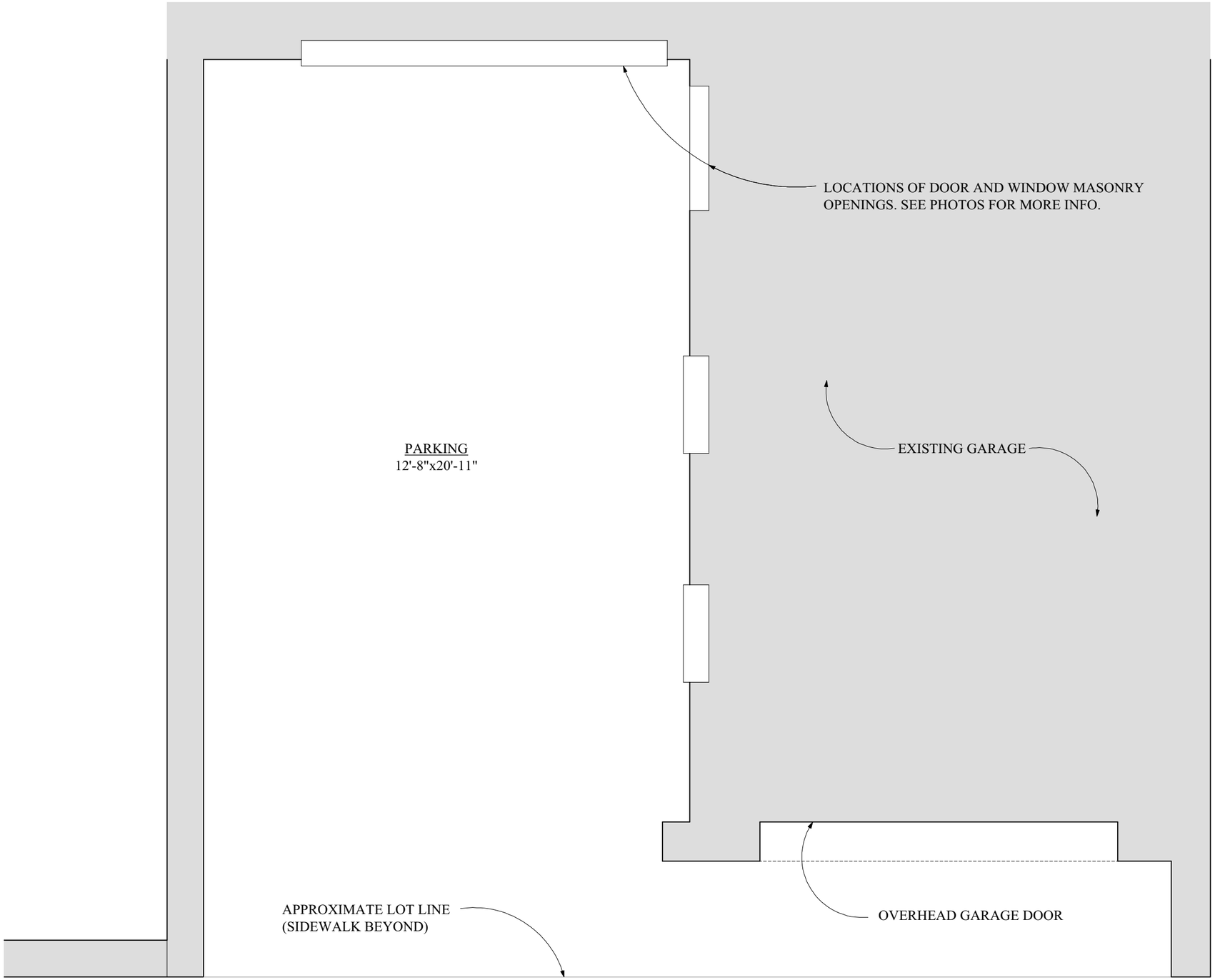

AS-BUILT PLAN

FRANK SHIRLEY
ARCHITECTS

40 Pearl Street
Cambridge MA 02139

t: 617.547.3355
f: 617.547.2385

www.frankshirleyarchitects.com

PROJECT

Alterations to:

55 COMMONWEALTH AVE.
Boston, MA 02116

THESE EXISTING PLANS AND/OR PHOTOGRAPHS ARE A REPRESENTATION OF THE EXISTING CONDITIONS OF THE BUILDING. THESE DRAWINGS/PHOTOGRAPHS ARE FOR THE GENERAL CHARACTERISTICS OF THE EXISTING CONDITIONS AND NOT AN EXHAUSTIVE INVESTIGATION INTO ACTUAL HIDDEN CONDITIONS. THIS INFORMATION IS FOR COORDINATION OF THE WORK TO BE PREFORMED BY THE GENERAL CONTRACTOR. THE ARCHITECT BEARS NO RESPONSIBILITY FOR THE ACCURACY OF THIS INFORMATION. THE GENERAL CONTRACTOR SHALL EXAMINE THESE CONDITIONS IN THE FIELD PRIOR TO CONSTRUCTION AND BECOME FAMILIAR WITH THE WORK. AFTER EXAMINATION OF THE EXISTING CONDITIONS, THE GENERAL CONTRACTOR SHALL VERIFY ALL CONDITIONS AND DIMENSIONS AND NOTIFY THE ARCHITECT OF ANY DISCREPANCIES BETWEEN THE EXISTING CONDITIONS AND THE NEW PROPOSED WORK. ALL WORK CONSTRUCTED PRIOR TO NOTIFICATION, THAT DOES NOT CONFORM TO THE DESIGN OR LAYOUT OF THE PLANS AND DIMENSIONS SHALL BE REPLACED BY THE GENERAL CONTRACTOR.

ISSUES / REVISIONS

Date	*Description*
12 APR 17	BBAC REVIEW

© FRANK SHIRLEY ARCHITECTS, 2017. All rights reserved.
This drawing cannot be reproduced without permission.

DRAWING TITLE

As-Built Plan

SCALE

DATE

April 12, 2017

SHEET NUMBER

BBAC-2

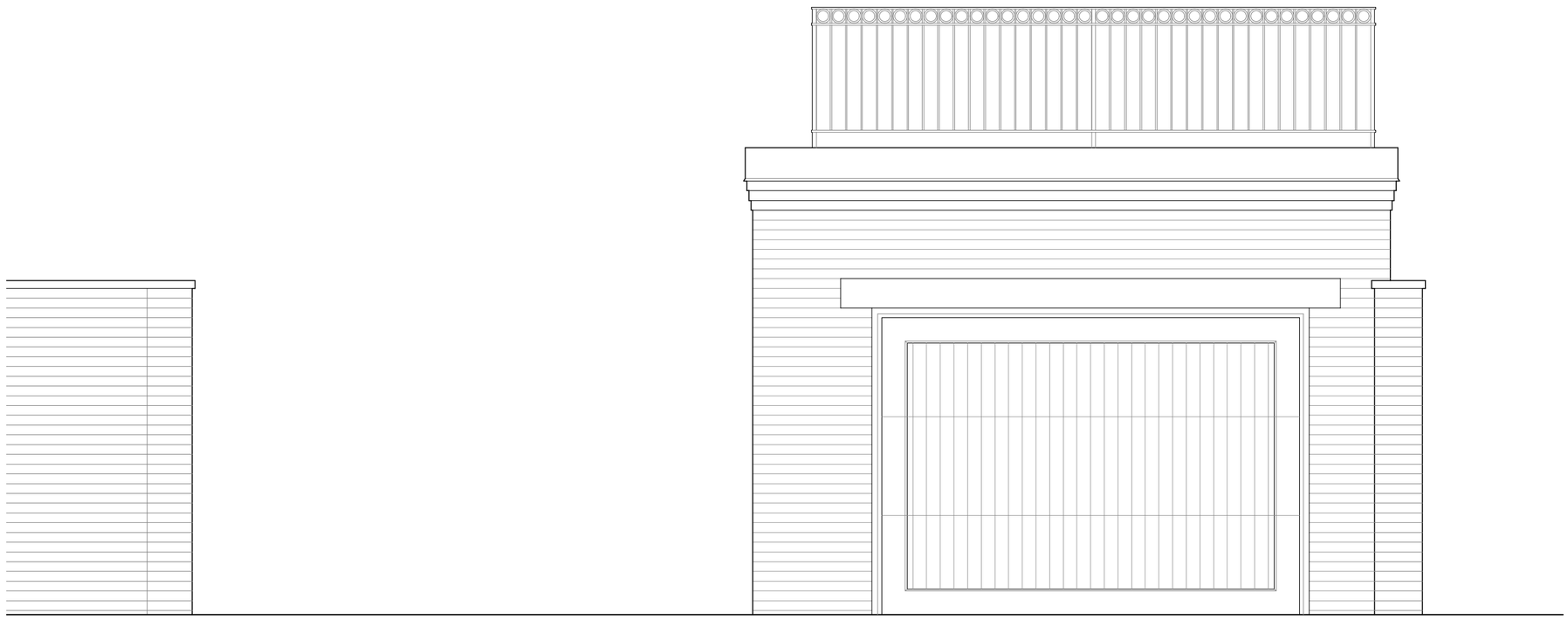

AS-BUILT ELEVATION

FRANK SHIRLEY

ARCHITECTS

40 Pearl Street
Cambridge MA 02139

t: 617.547.3355
f: 617.547.2385

www.frankshirleyarchitects.com

PROJECT

Alterations to:

55 COMMONWEALTH AVE.
Boston, MA 02116

THESE EXISTING PLANS AND/OR PHOTOGRAPHS ARE A REPRESENTATION OF THE EXISTING CONDITIONS OF THE BUILDING. THESE DRAWINGS/PHOTOGRAPHS ARE FOR THE GENERAL CHARACTERISTICS OF THE EXISTING CONDITIONS AND NOT AN EXHAUSTIVE INVESTIGATION INTO ACTUAL HIDDEN CONDITIONS. THIS INFORMATION IS FOR COORDINATION OF THE WORK TO BE PREFORMED BY THE GENERAL CONTRACTOR. THE ARCHITECT BEARS NO RESPONSIBILITY FOR THE ACCURACY OF THIS INFORMATION. THE GENERAL CONTRACTOR SHALL EXAMINE THESE CONDITIONS IN THE FIELD PRIOR TO CONSTRUCTION AND BECOME FAMILIAR WITH THE WORK. AFTER EXAMINATION OF THE EXISTING CONDITIONS, THE GENERAL CONTRACTOR SHALL VERIFY ALL CONDITIONS AND DIMENSIONS AND NOTIFY THE ARCHITECT OF ANY DISCREPANCIES BETWEEN THE EXISTING CONDITIONS AND THE NEW PROPOSED WORK. ALL WORK CONSTRUCTED PRIOR TO NOTIFICATION, THAT DOES NOT CONFORM TO THE DESIGN OR LAYOUT OF THE PLANS AND DIMENSIONS SHALL BE REPLACED BY THE GENERAL CONTRACTOR.

ISSUES / REVISIONS

Date	*Description*
12 APR 17	BBAC REVIEW

© FRANK SHIRLEY ARCHITECTS, 2017. All rights reserved.
This drawing cannot be reproduced without permission.

DRAWING TITLE

As-Built Elevation

SCALE

DATE

April 12, 2017

SHEET NUMBER

BBAC-3

NEIGHBOR'S GATE @ ALLEY

FENCE AT FRONT OF PROPERTY

FRANK SHIRLEY

ARCHITECTS

40 Pearl Street
Cambridge MA 02139

t: 617.547.3355
f: 617.547.2385

www.frankshirleyarchitects.com

PROJECT

Alterations to:

55 COMMONWEALTH AVE.
Boston, MA 02116

THESE EXISTING PLANS AND/OR PHOTOGRAPHS ARE A REPRESENTATION OF THE EXISTING CONDITIONS OF THE BUILDING. THESE DRAWINGS/PHOTOGRAPHS ARE FOR THE GENERAL CHARACTERISTICS OF THE EXISTING CONDITIONS AND NOT AN EXHAUSTIVE INVESTIGATION INTO ACTUAL HIDDEN CONDITIONS. THIS INFORMATION IS FOR COORDINATION OF THE WORK TO BE PREFORMED BY THE GENERAL CONTRACTOR. THE ARCHITECT BEARS NO RESPONSIBILITY FOR THE ACCURACY OF THIS INFORMATION. THE GENERAL CONTRACTOR SHALL EXAMINE THESE CONDITIONS IN THE FIELD PRIOR TO CONSTRUCTION AND BECOME FAMILIAR WITH THE WORK. AFTER EXAMINATION OF THE EXISTING CONDITIONS, THE GENERAL CONTRACTOR SHALL VERIFY ALL CONDITIONS AND DIMENSIONS AND NOTIFY THE ARCHITECT OF ANY DISCREPANCIES BETWEEN THE EXISTING CONDITIONS AND THE NEW PROPOSED WORK. ALL WORK CONSTRUCTED PRIOR TO NOTIFICATION, THAT DOES NOT CONFORM TO THE DESIGN OR LAYOUT OF THE PLANS AND DIMENSIONS SHALL BE REPLACED BY THE GENERAL CONTRACTOR.

ISSUES / REVISIONS

Date	*Description*
12 APR 17	BBAC REVIEW

© FRANK SHIRLEY ARCHITECTS, 2017. All rights reserved.
This drawing cannot be reproduced without permission.

DRAWING TITLE

Precedent Photos

SCALE

DATE

April 12, 2017

SHEET NUMBER

BBAC-4

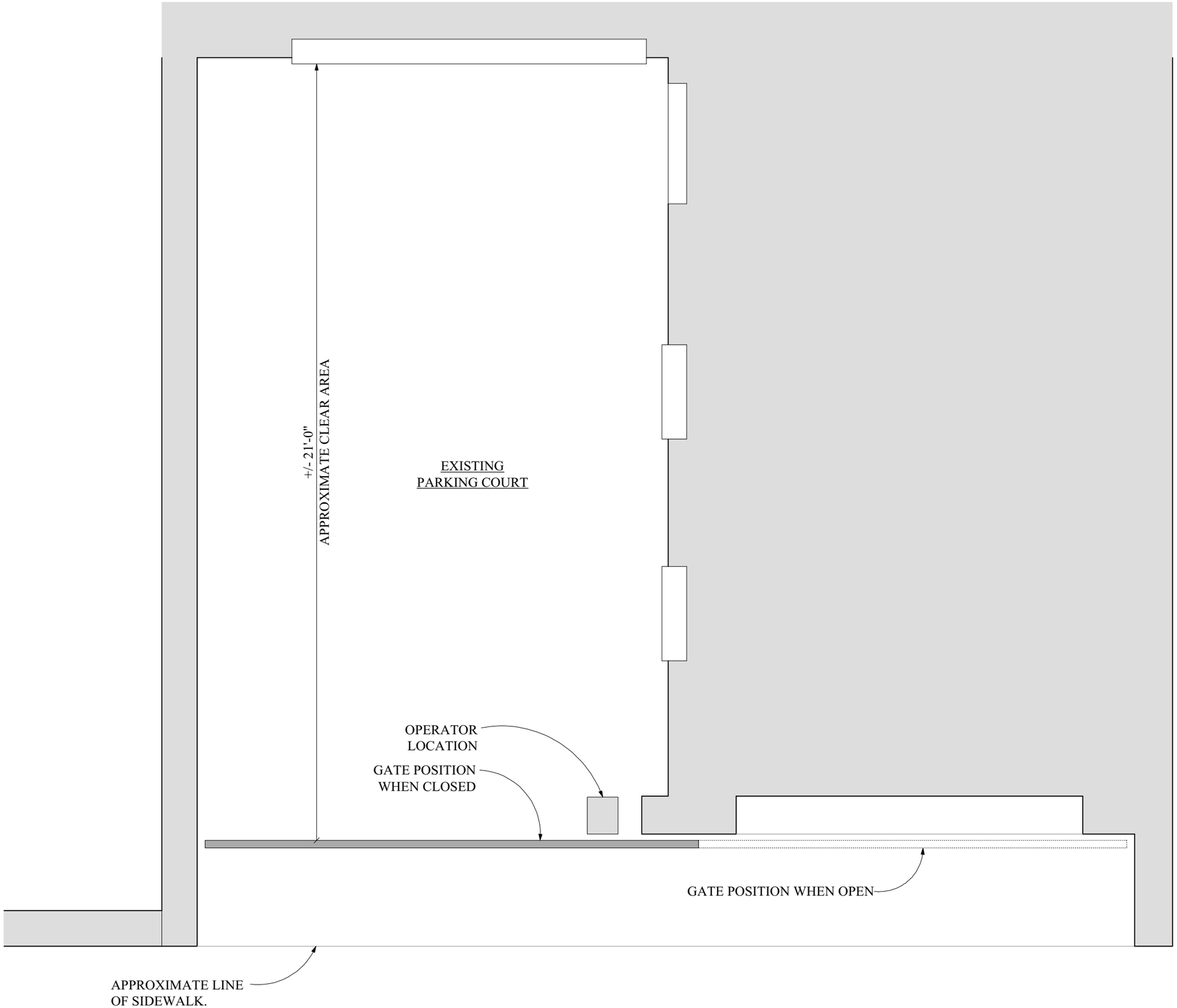

PROPOSED PLAN

FRANK SHIRLEY
ARCHITECTS

40 Pearl Street
Cambridge MA 02139

t: 617.547.3355
f: 617.547.2385

www.frankshirleyarchitects.com

PROJECT

Alterations to:

55 COMMONWEALTH AVE.
Boston, MA 02116

THESE EXISTING PLANS AND/OR PHOTOGRAPHS ARE A REPRESENTATION OF THE EXISTING CONDITIONS OF THE BUILDING. THESE DRAWINGS/PHOTOGRAPHS ARE FOR THE GENERAL CHARACTERISTICS OF THE EXISTING CONDITIONS AND NOT AN EXHAUSTIVE INVESTIGATION INTO ACTUAL HIDDEN CONDITIONS. THIS INFORMATION IS FOR COORDINATION OF THE WORK TO BE PREFORMED BY THE GENERAL CONTRACTOR. THE ARCHITECT BEARS NO RESPONSIBILITY FOR THE ACCURACY OF THIS INFORMATION. THE GENERAL CONTRACTOR SHALL EXAMINE THESE CONDITIONS IN THE FIELD PRIOR TO CONSTRUCTION AND BECOME FAMILIAR WITH THE WORK. AFTER EXAMINATION OF THE EXISTING CONDITIONS, THE GENERAL CONTRACTOR SHALL VERIFY ALL CONDITIONS AND DIMENSIONS AND NOTIFY THE ARCHITECT OF ANY DISCREPANCIES BETWEEN THE EXISTING CONDITIONS AND THE NEW PROPOSED WORK. ALL WORK CONSTRUCTED PRIOR TO NOTIFICATION, THAT DOES NOT CONFORM TO THE DESIGN OR LAYOUT OF THE PLANS AND DIMENSIONS SHALL BE REPLACED BY THE GENERAL CONTRACTOR.

ISSUES / REVISIONS

Date	*Description*
12 APR 17	BBAC REVIEW

© FRANK SHIRLEY ARCHITECTS, 2017. All rights reserved.
This drawing cannot be reproduced without permission.

DRAWING TITLE

Proposed Plan

SCALE

DATE

April 12, 2017

SHEET NUMBER

BBAC-5

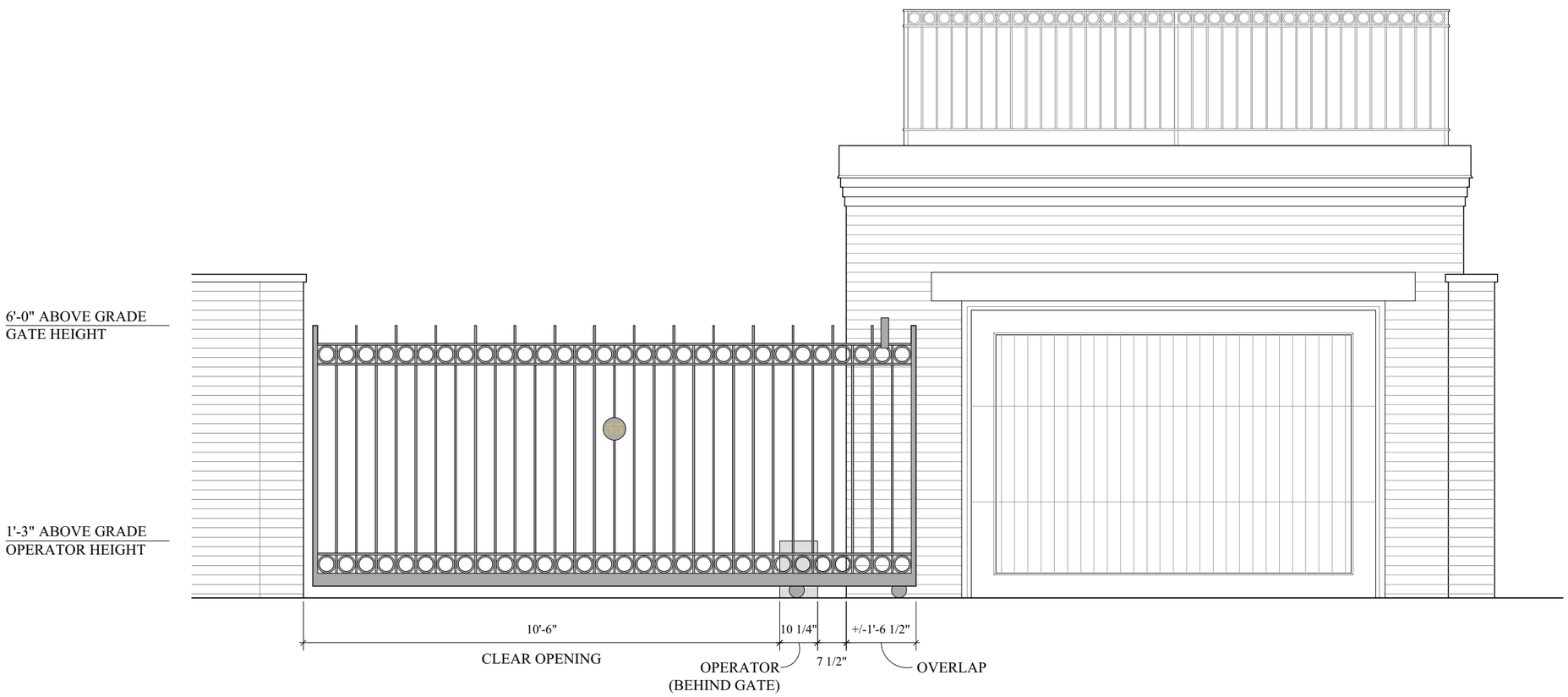

PROPOSED ELEVATION

FRANK SHIRLEY
ARCHITECTS

40 Pearl Street
Cambridge MA 02139

t: 617.547.3355
f: 617.547.2385

www.frankshirleyarchitects.com

PROJECT

Alterations to:

55 COMMONWEALTH AVE.
Boston, MA 02116

THESE EXISTING PLANS AND/OR PHOTOGRAPHS ARE A REPRESENTATION OF THE EXISTING CONDITIONS OF THE BUILDING. THESE DRAWINGS/PHOTOGRAPHS ARE FOR THE GENERAL CHARACTERISTICS OF THE EXISTING CONDITIONS AND NOT AN EXHAUSTIVE INVESTIGATION INTO ACTUAL HIDDEN CONDITIONS. THIS INFORMATION IS FOR COORDINATION OF THE WORK TO BE PREFORMED BY THE GENERAL CONTRACTOR. THE ARCHITECT BEARS NO RESPONSIBILITY FOR THE ACCURACY OF THIS INFORMATION. THE GENERAL CONTRACTOR SHALL EXAMINE THESE CONDITIONS IN THE FIELD PRIOR TO CONSTRUCTION AND BECOME FAMILIAR WITH THE WORK. AFTER EXAMINATION OF THE EXISTING CONDITIONS, THE GENERAL CONTRACTOR SHALL VERIFY ALL CONDITIONS AND DIMENSIONS AND NOTIFY THE ARCHITECT OF ANY DISCREPANCIES BETWEEN THE EXISTING CONDITIONS AND THE NEW PROPOSED WORK. ALL WORK CONSTRUCTED PRIOR TO NOTIFICATION, THAT DOES NOT CONFORM TO THE DESIGN OR LAYOUT OF THE PLANS AND DIMENSIONS SHALL BE REPLACED BY THE GENERAL CONTRACTOR.

ISSUES / REVISIONS

Date	*Description*
12 APR 17	BBAC REVIEW

© FRANK SHIRLEY ARCHITECTS, 2017. All rights reserved.
This drawing cannot be reproduced without permission.

DRAWING TITLE

Proposed Elevation

SCALE

DATE

April 12, 2017

SHEET NUMBER

BBAC-6

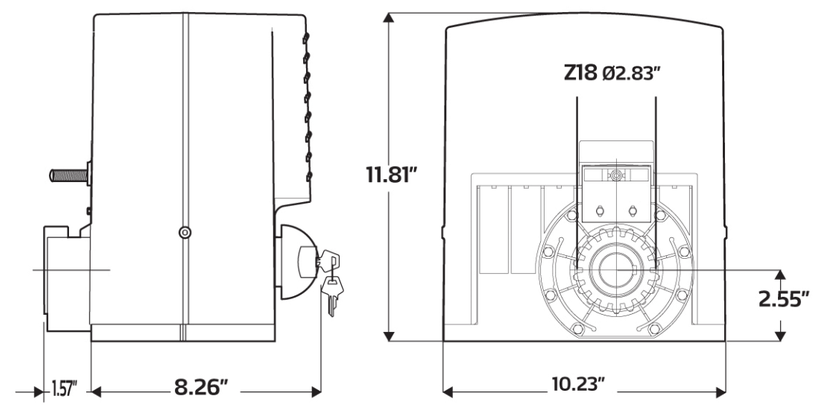

PROPOSED GATE OPERATOR

FRANK SHIRLEY
ARCHITECTS

40 Pearl Street
Cambridge MA 02139
t: 617.547.3355
f: 617.547.2385
www.frankshirleyarchitects.com

PROJECT

Alterations to:

55 COMMONWEALTH AVE.
Boston, MA 02116

THESE EXISTING PLANS AND/OR PHOTOGRAPHS ARE A REPRESENTATION OF THE EXISTING CONDITIONS OF THE BUILDING. THESE DRAWINGS/PHOTOGRAPHS ARE FOR THE GENERAL CHARACTERISTICS OF THE EXISTING CONDITIONS AND NOT AN EXHAUSTIVE INVESTIGATION INTO ACTUAL HIDDEN CONDITIONS. THIS INFORMATION IS FOR COORDINATION OF THE WORK TO BE PREFORMED BY THE GENERAL CONTRACTOR. THE ARCHITECT BEARS NO RESPONSIBILITY FOR THE ACCURACY OF THIS INFORMATION. THE GENERAL CONTRACTOR SHALL EXAMINE THESE CONDITIONS IN THE FIELD PRIOR TO CONSTRUCTION AND BECOME FAMILIAR WITH THE WORK. AFTER EXAMINATION OF THE EXISTING CONDITIONS, THE GENERAL CONTRACTOR SHALL VERIFY ALL CONDITIONS AND DIMENSIONS AND NOTIFY THE ARCHITECT OF ANY DISCREPANCIES BETWEEN THE EXISTING CONDITIONS AND THE NEW PROPOSED WORK. ALL WORK CONSTRUCTED PRIOR TO NOTIFICATION, THAT DOES NOT CONFORM TO THE DESIGN OR LAYOUT OF THE PLANS AND DIMENSIONS SHALL BE REPLACED BY THE GENERAL CONTRACTOR.

ISSUES / REVISIONS

Date	Description
12 APR 17	BBAC REVIEW

© FRANK SHIRLEY ARCHITECTS, 2017. All rights reserved.
This drawing cannot be reproduced without permission.

DRAWING TITLE

Proposed Plan

SCALE

DATE

April 12, 2017

SHEET NUMBER

BBAC-7